EN

SFP9-SF Pistol

9 mm x 19 Calibre

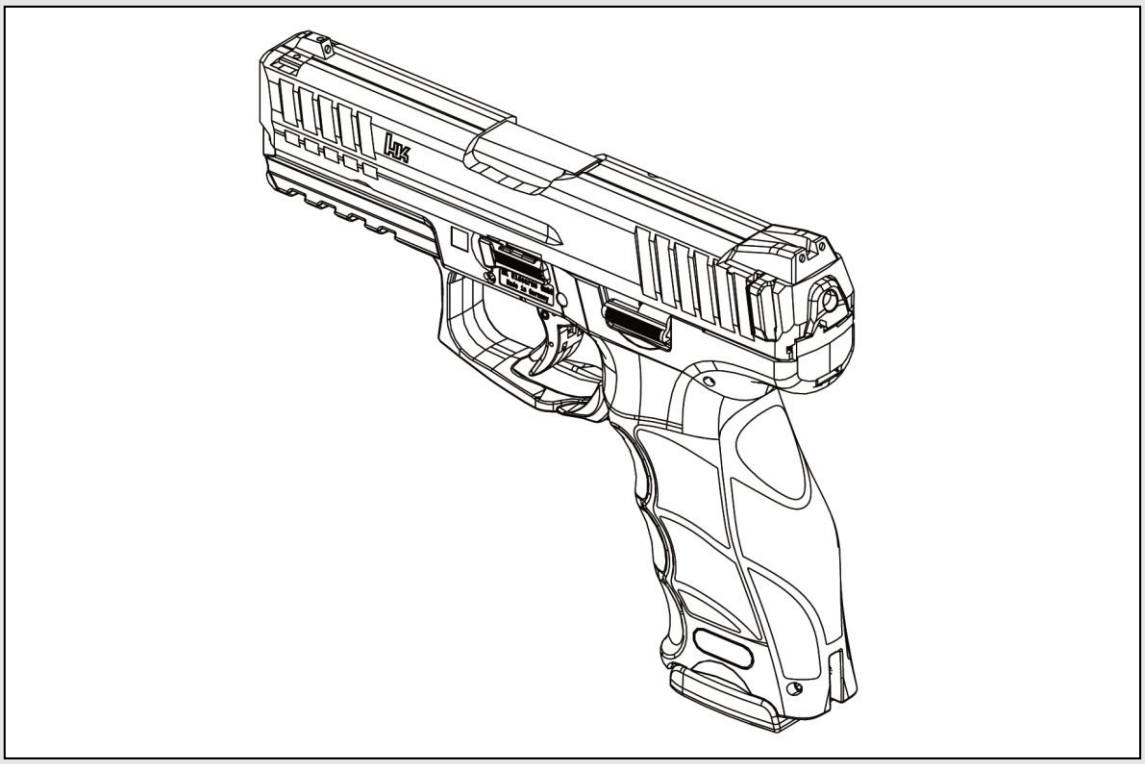

Color of the weapon: Black

Spare Parts Catalogue

SFP9-SF Pistol

9 mm x 19 Calibre

Table of contents

Using this spare parts catalogue 3

Purpose of this spare parts catalogue 3

Target audience for this spare parts catalogue 3

Information in the spare parts catalogue 3

Spare Parts Documentation 6

Assembly groups 6

Slide, compl. 8

Recoil spring, compl. 12

Frame, compl. 14

Magazine, compl. 18

Accessories 20

Using this spare parts catalogue

Purpose of this spare parts catalogue

This spare parts catalogue can be used to order individual components and assembly groups for the weapon.

Target audience for this spare parts catalogue

This spare parts catalogue is intended for trained firearms technicians and administrative personnel.

Information in the spare parts catalogue

This spare parts catalogue contains all of the information that is necessary to order individual components and assembly groups for the weapon. The contents of this spare parts catalogue have the following meanings:

Information	Meaning
Illustration of individual components	The illustration of individual components is an exploded view showing all parts of the weapon that can be ordered.
Item (Item Number)	The Item Number shows the number of the part in the exploded view. If there is a "--" instead of the Item Number, then the indicated item is not shown in the exploded view, but can be ordered nevertheless.
Designation	The designation contains the name of the part. If more than one of a part is present, then the number of parts is shown in brackets after the designation, e.g. (2x).
Ident.-No. (Identification Number)	The Ident.-No. is Heckler & Koch's internal number for identifying products and individual components.
NSN (NATO Stock Number) – optional	The NATO Stock Number is an international code for the classification of products and individual components.

Information	Meaning
Quantity per 100 weapons – optional	This number indicates the recommended quantity to keep in stock per 100 weapons. The quantity includes both wearing parts and parts which may become lost. This information represents theoretical values based on experience, and may vary in practice.
Quantity per maintenance unit – optional	This number indicates the recommended quantity to keep in stock per maintenance unit. The quantity includes both wearing parts and parts which may become lost. This information represents theoretical values based on experience, and may vary in practice.
Comments	This column may contain additional information.

Parts and assembly groups can be ordered from Heckler & Koch by indicating the weapon, Designation and Ident.-No.

Assembly groups

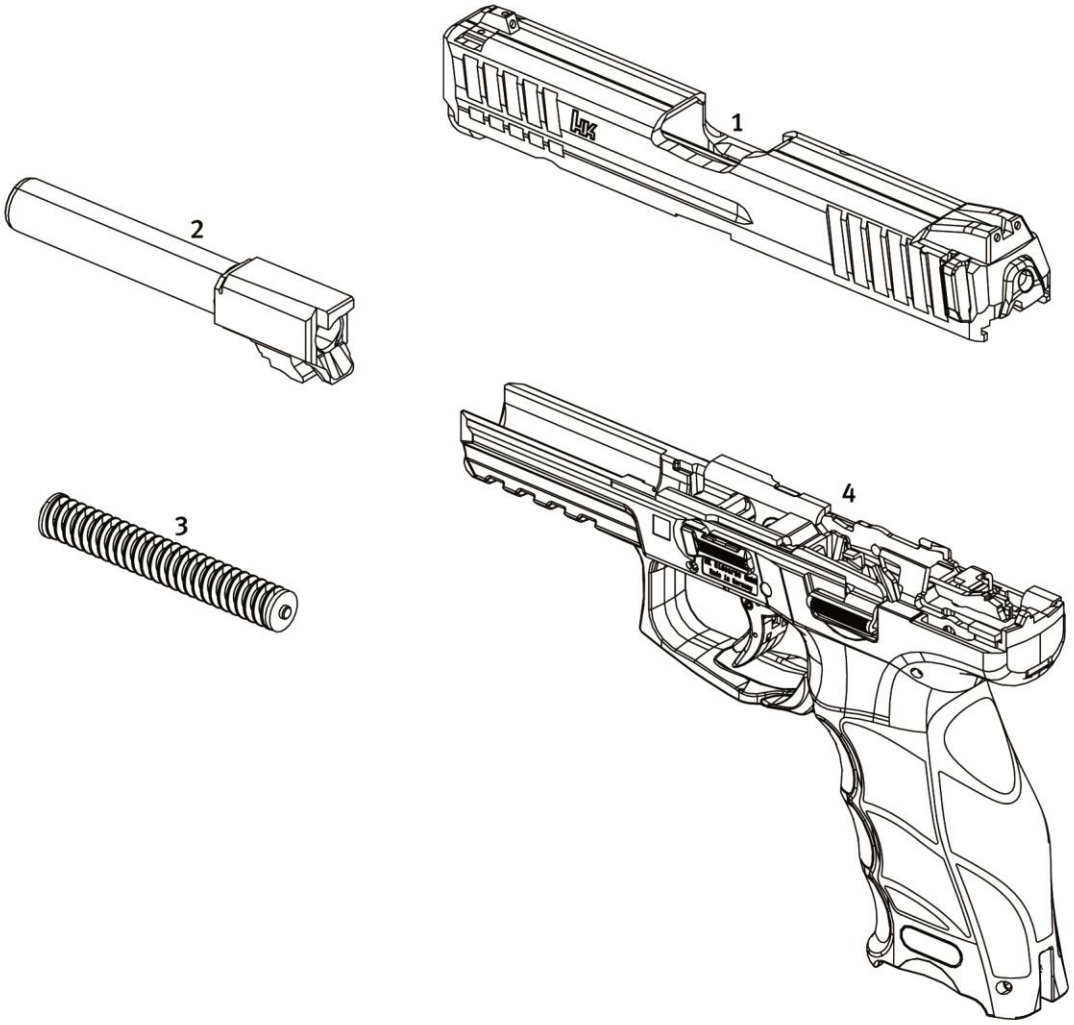

Assembly groups

Item	Designation	Ident.-No.	NSN	Quantity per 100 weapons	Comments
--	SFP9-SF Pistol 9 mm x 19 Calibre (Item 1 - 4)	239328		--	
1	Slide, compl.	226362		3	
2	Barrel	239327		--	Barrel length: 106 mm
3	Recoil spring, compl.	226311		5	
4	Frame, compl.	226361		--	

Pistol
SFP9-SF

Calibre
9 mm x 19

Slide, compl.

Spare Parts Catalogue
Heckler & Koch GmbH

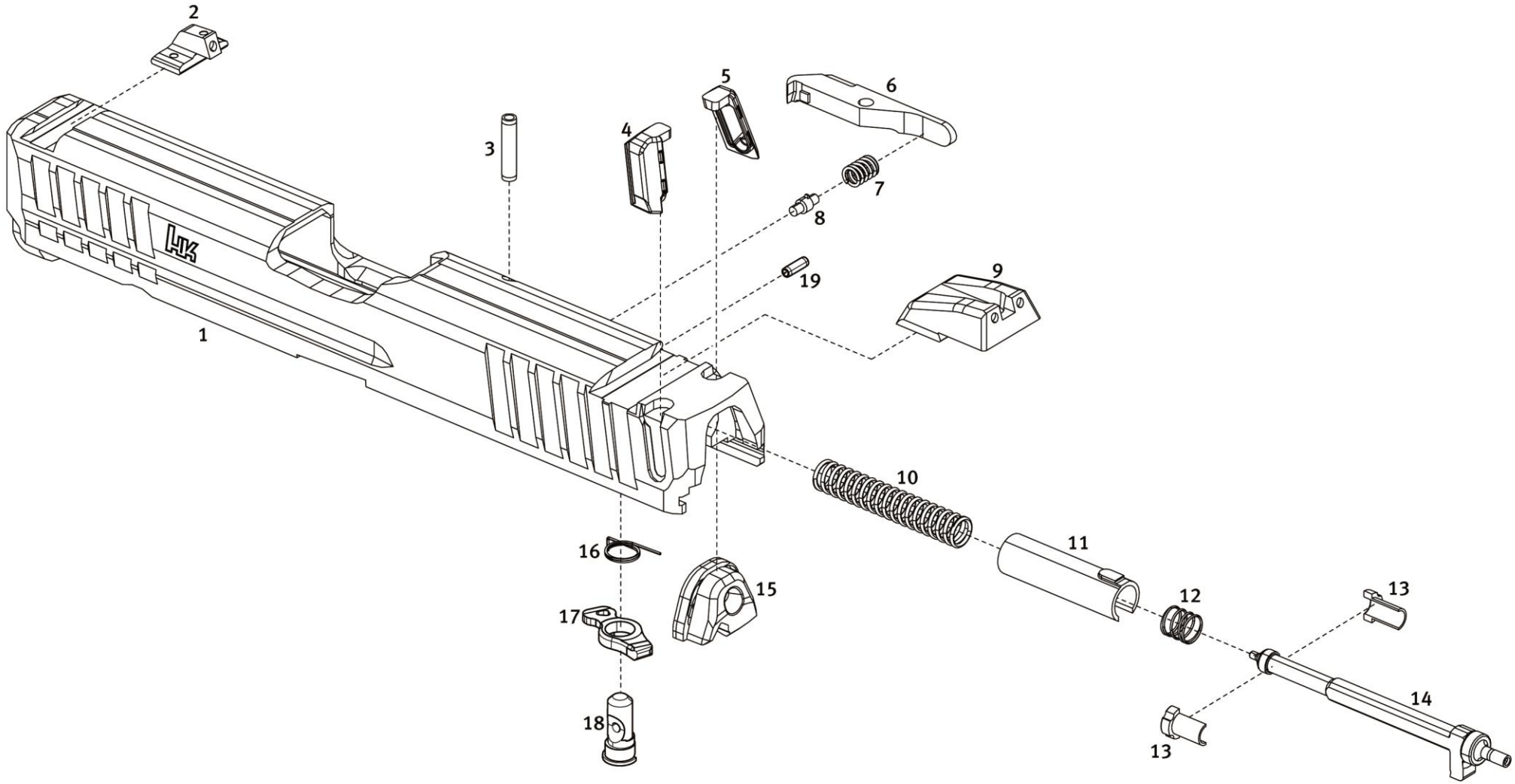

Pistol SFP9-SF **Calibre** 9 mm x 19	**Slide, compl.**	Spare Parts Catalogue Heckler & Koch GmbH

Item	Designation	Ident.-No.	NSN	Quantity per 100 weapons	Comments
--	Slide, compl. (Item 1 - 19)	226362		--	
1	Slide	260476		--	
2	Front sight, height 5,9 mm	227711	1005-12-393-1093	5	
2.1	Front sight, height 6,1 mm	234327	1005-12-393-1094	5	
2.2	Front sight, height 6,3 mm	234328	1005-12-393-0580	5	
2.3	Front sight, height 6,5 mm	234329	1005-12-393-0074	5	
2.4	Front sight, height 6,7 mm	234386	1005-12-393-0575	5	
2.5	Front sight, height 6,9 mm	234387	1005-12-393-0073	5	
3	Clamping sleeve for extractor	988891	5315-12-374-5315	10	
4	Charging support, left (size L)	239261		5	
5	Charging support, right (size L)	239260		5	
6	Extractor	218314		5	
7	Pressure spring for extractor	218315	1005-12-393-0472	5	
8	Rubber plug	209294	5120-12-393-0496	5	

Pistol
SFP9-SF

Calibre
9 mm x 19

Slide, compl.

Spare Parts Catalogue
Heckler & Koch GmbH

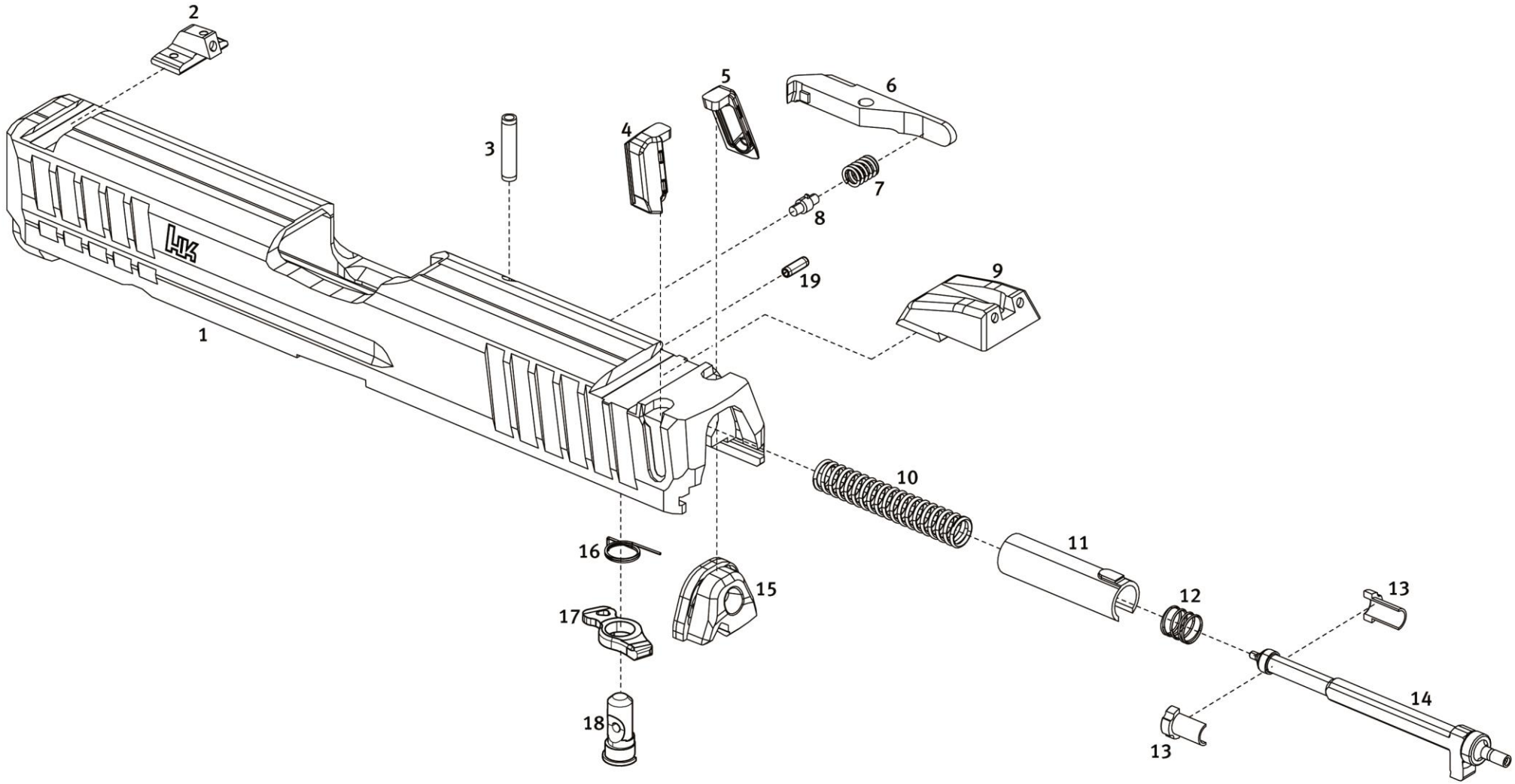

Pistol SFP9-SF **Calibre** 9 mm x 19	**Slide, compl.**	**Spare Parts Catalogue** **Heckler & Koch GmbH**

Item	Designation	Ident.-No.	NSN	Quantity per 100 weapons	Comments
9	Rear sight	234323	1005-12-393-1042	5	
--	Firing pin, compl. (Item 10 - 14)	223516		--	
10	Main spring	226233		5	
11	Support sleeve	260488		5	
12	Pressure spring for firing pin	260487		5	
13	Spring washer (2x)	260489		10	
14	Firing pin	223501		5	
15	Slide plate	260504		5	
16	Elbow spring for firing pin safety	260478		5	
17	Firing pin safety	226316		3	
18	Axle for firing pin safety	226314		3	
19	Clamping sleeve for axle	976574		10	

Recoil spring, compl.

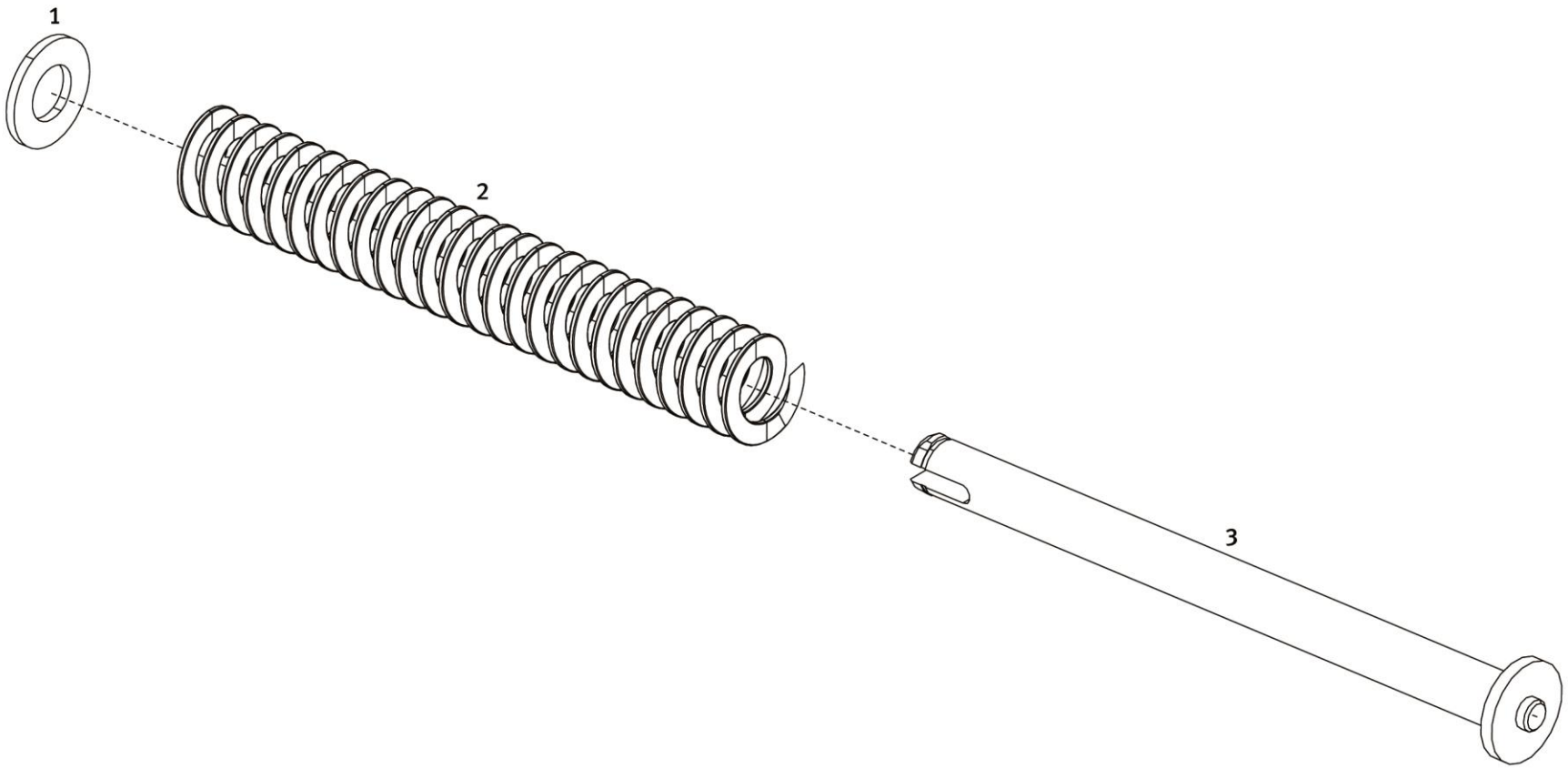

Pistol SFP9-SF **Calibre** 9 mm x 19	**Recoil spring, compl.**	Spare Parts Catalogue Heckler & Koch GmbH

Item	Designation	Ident.-No.	NSN	Quantity per 100 weapons	Comments
--	Recoil spring, compl. (Item 1 - 3)	226311		5	
1	Stop disc for recoil spring	260492		5	
2	Recoil spring	226234		5	
3	Recoil spring guide rod	260493		--	

Frame, compl.

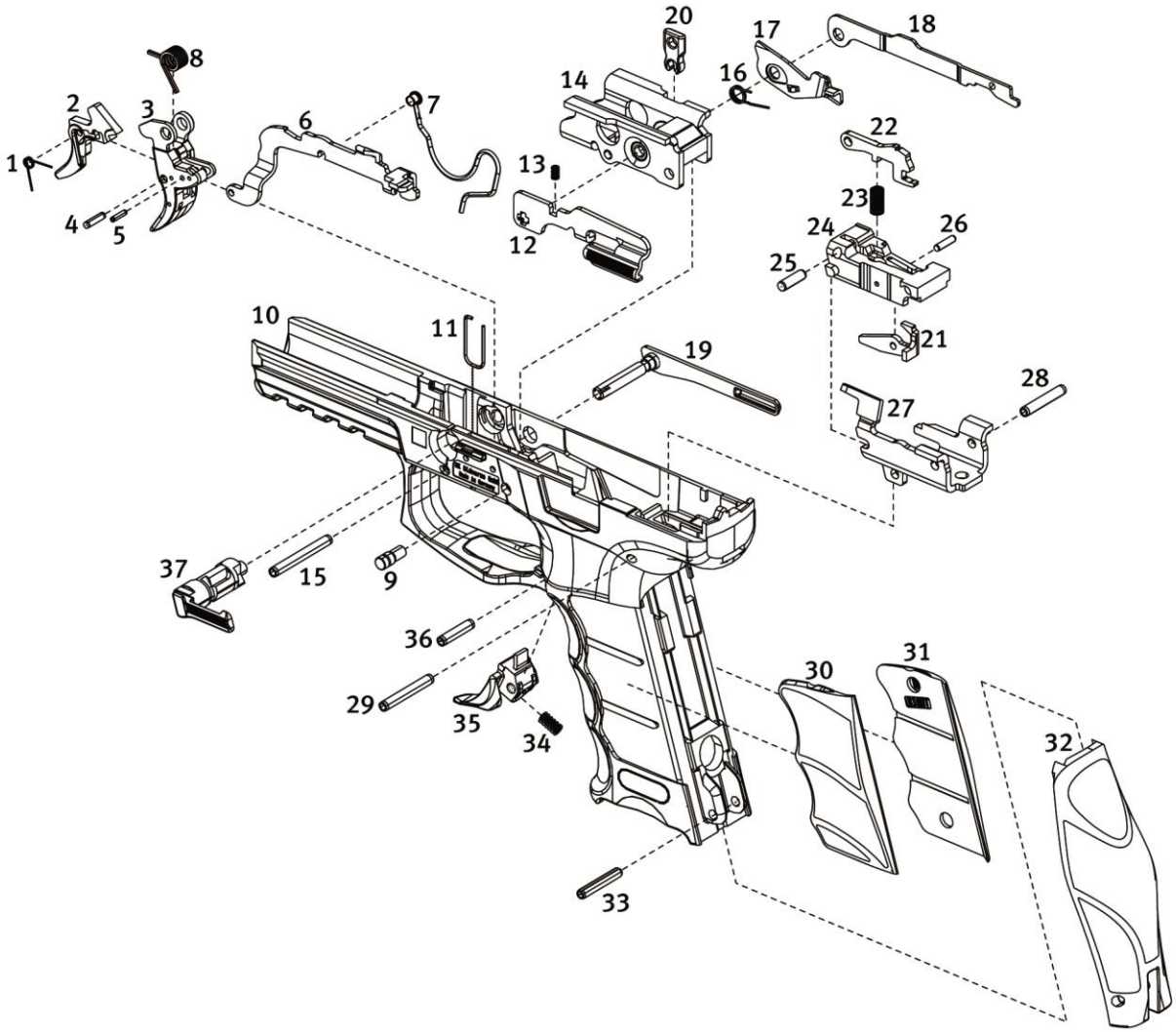
1
2
3
4
5
6
7
8
9
10
11
12
13
14
15
16
17
18
19
20
21
22
23
24
25
26
27
28
29
30
31
32
33
34
35
36
37

Pistol SFP9-SF **Calibre** 9 mm x 19	**Frame, compl.**	**Spare Parts Catalogue** **Heckler & Koch GmbH**

Item	Designation	Ident.-No.	NSN	Quantity per 100 weapons	Comments
--	Frame, compl. (Item 1 – 37)	226361		--	
--	Trigger, compl. (Item 1 - 5)	223434		5	
1	Elbow spring for trigger safety	260459		--	
2	Trigger safety	260458		--	
3	Trigger	223435		--	
4	Axle for trigger safety	975812		5	
5	Stop pin for elbow spring	967947		--	
6	Trigger bar	223438		5	
7	Shaped spring for trigger bar, compl.	260502		10	
8	Elbow spring for trigger	223565		5	
9	Stop bolt for trigger	260440		5	
10	Frame	229960		--	
11	Stop spring for disassembly lever	260453		10	
12	Slide release, left	260431		5	
13	Pressure spring for slide release	260454		20	
14	Locking block	260501		5	
15	Clamping sleeve for locking block	226312		10	
16	Elbow spring for disassembly safety	260429		10	
17	Disassembly safety	260430		5	
18	Disconnector	223452		5	

Frame, compl.

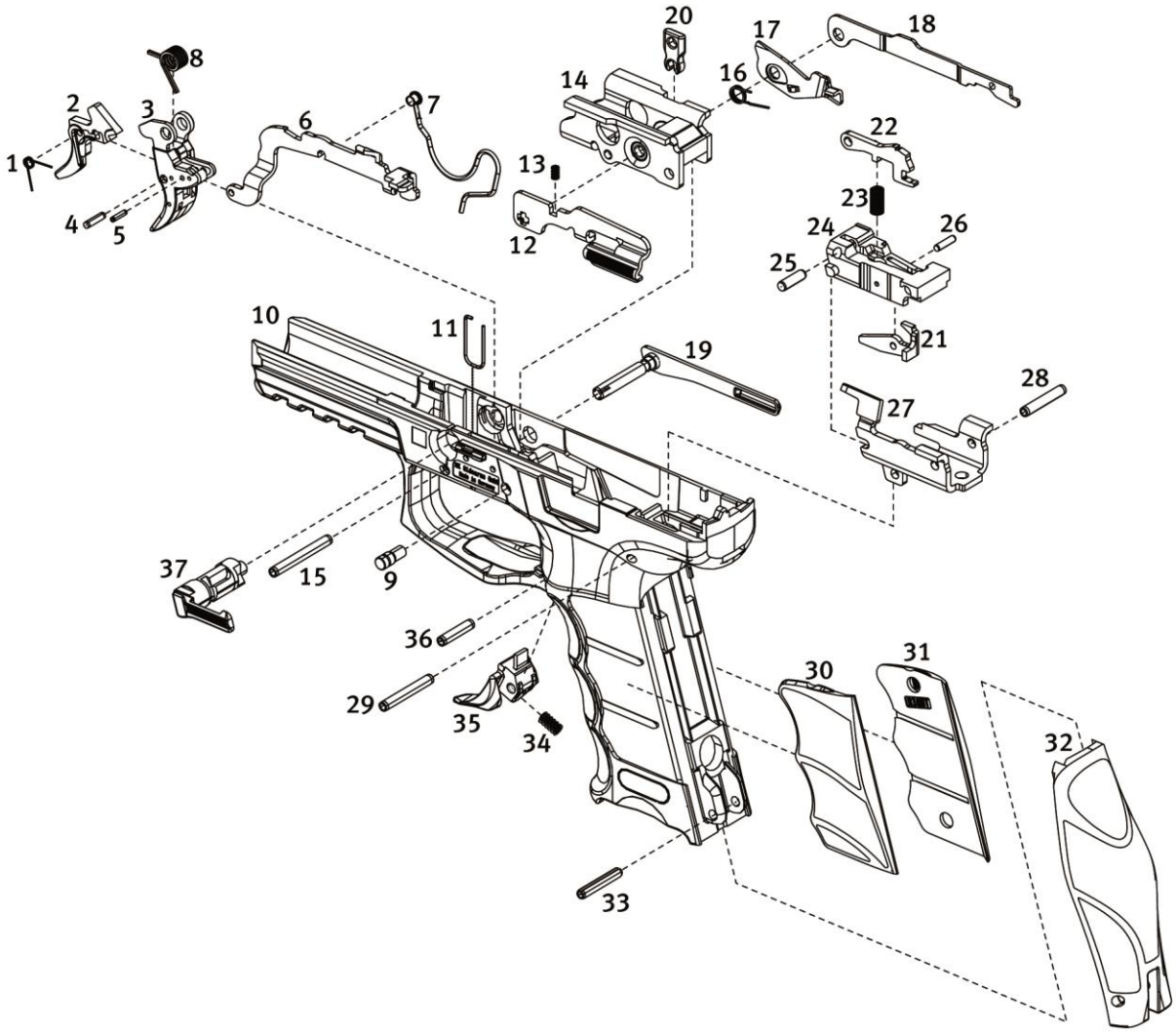
1
2
3
4
5
6
7
8
9
10
11
12
13
14
15
16
17
18
19
20
21
22
23
24
25
26
27
28
29
30
31
32
33
34
35
36
37

Frame, compl.

Item	Designation	Ident.-No.	NSN	Quantity per 100 weapons	Comments
19	Slide release, right	260498		5	
20	Safety clamp	260436		5	
--	Trigger housing, compl. (Item 21 - 28)	223436		--	
21	Sear release catch	226319		5	
22	Catch	226317		5	
23	Pressure spring for catch	223129		10	
24	Insert	223426		5	
25	Cylindrical pin for catch	973785		10	
26	Cylindrical pin for sear release catch	979581		10	
27	Trigger housing	226373		3	
28	Clamping sleeve for insert	978170	5315-12-394-2933	10	
29	Clamping sleeve for trigger housing	975715		10	
30	Grip shell, left (size M)	260445		3	
31	Grip shell, right (size M)	260446		3	
32	Back strap (size M)	260444		3	
33	Clamping sleeve for back strap	978170	5315-12-394-2933	10	
34	Pressure spring for magazine catch	239387		5	
35	Magazine catch	260500		3	
36	Clamping sleeve for magazine catch	988891	5315-12-374-5315	10	
37	Disassembly lever	260427		5	

Magazine, compl.

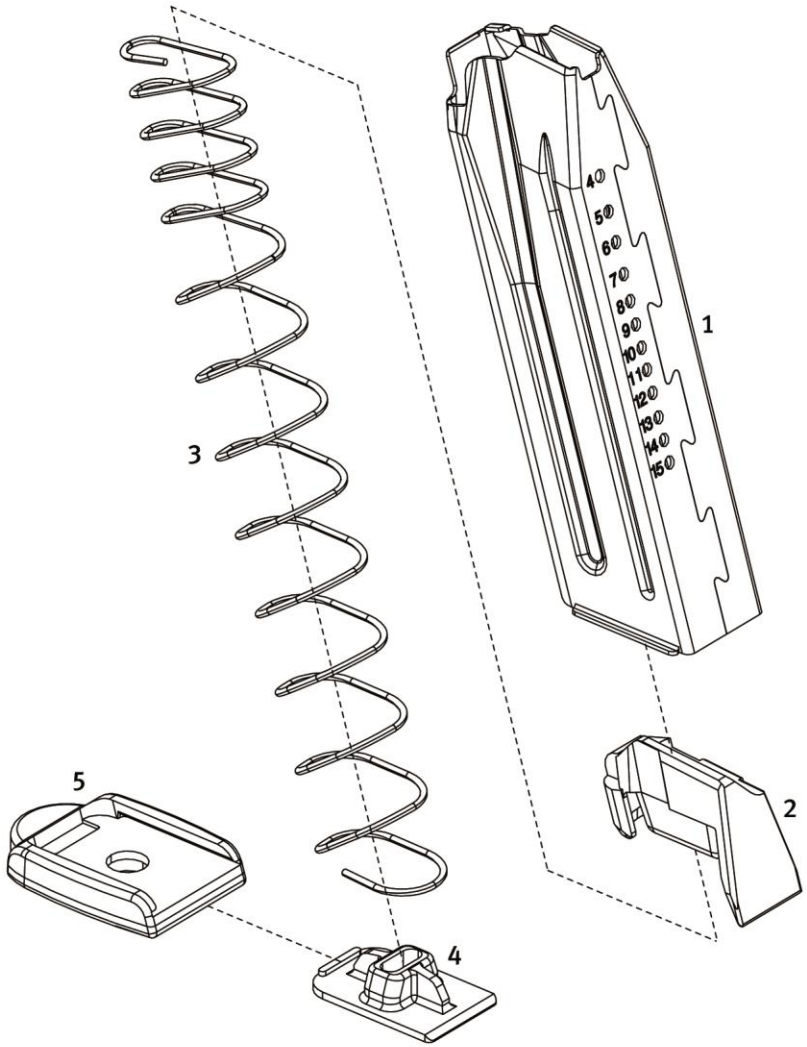

Pistol SFP9-SF **Calibre** 9 mm x 19	**Magazine, compl.**	**Spare Parts Catalogue** **Heckler & Koch GmbH**

Item	Designation	Ident.-No.	NSN	Quantity per 100 weapons	Comments
--	Magazine, compl. (Item 1 - 5)	227869		10	Color of the follower: red
1	Magazine housing	234318		--	
2	Follower	234276		--	Color of the follower: red
3	Magazine spring	215118		--	
4	Magazine locking plate	215844		--	
5	Magazine floor plate	234298		--	Color of the magazine floor plate: black
--	Magazine, compl. (Item 1 - 5)	234316		10	Color of the follower: black
1	Magazine housing	234318		--	
2	Follower	215836		--	Color of the follower: black
3	Magazine spring	215118		--	
4	Magazine locking plate	215844		--	
5	Magazine floor plate	234298		--	Color of the magazine floor plate: black

Accessories

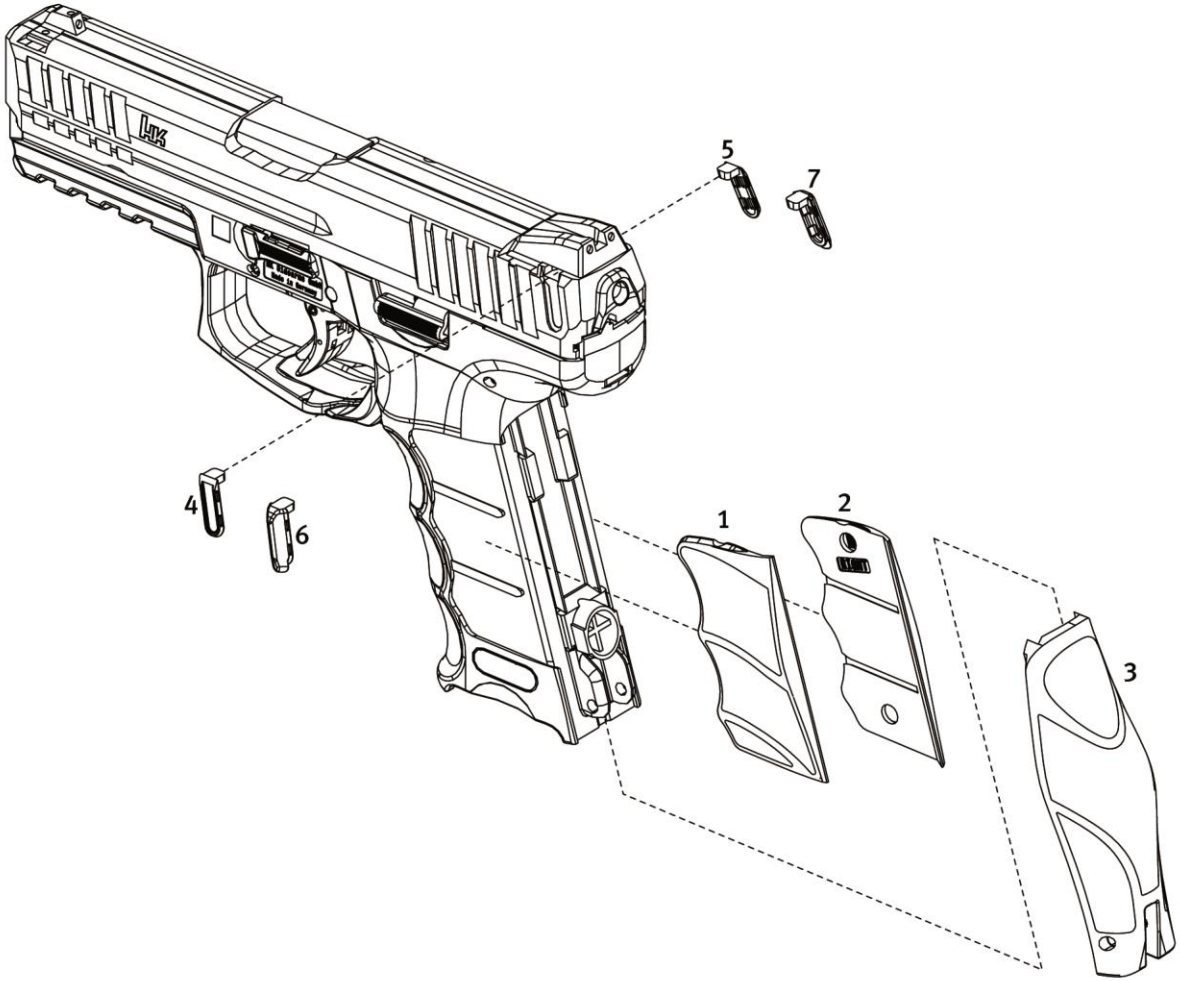

Accessories

Item	Designation	Ident.-No.	NSN	Quantity per 100 weapons	Comments
1.1	Grip shell, left (size S)	260442		3	
1.2	Grip shell, left (size L)	260449		3	
2.1	Grip shell, right (size S)	260443		3	
2.2	Grip shell, right (size L)	260450		3	
3.1	Back strap (size S)	260441		3	
3.2	Back strap (size L)	260448		3	
4	Filler piece, left	260483		5	
5	Filler piece, right	260482		5	
6	Charging support, left (size M)	260481		5	
7	Charging support, right (size M)	260480		5	

No Compromise

Quality . Innovation . Service . Safety

TECHNISCHE DOKUMENTATION

Heckler & Koch GmbH
Heckler & Koch-Str. 1
78727 Oberndorf/N.
Germany

Telephone: +49 (0) 74 23 / 79-0
Fax: +49 (0) 74 23 / 79-23 50
E-mail: TD@heckler-koch-de.com
Internet: www.heckler-koch.com

Copyright © 2015
Made in Germany
Version 002.0915