INSTRUCTION MANUAL

CZ 82

ČESKÁ ZBROJOVKA

SINCE 1936

Before handling the pistol read this manual carefully and observe the following safety instructions.

Improper and careless handling of the pistol could result in unintentional discharge and could cause injury, death or damage to property. The same consequences can be caused by unauthorized modifications or adjustments, corrosion, or use of non-standard or damaged ammunition. In these cases the manufacturer shall not be responsible in any manner whatsoever for the resultant consequences.

Before leaving the factory this pistol was tested, carefully inspected, and packed. CZ cannot accept responsibility for product handling while in transit, or upon leaving the factory. Therefore, please examine this pistol carefully at the time of purchase to ensure that it is unloaded and undamaged.

This instruction manual should always accompany this pistol even in the case of the loan or sale of the pistol.

CONTENTS

SAFETY INSTRUCTIONS	3
PISTOL DESCRIPTION AND TERMINOLOGY	4
OPERATING INSTRUCTIONS	5
Ammunition	5
Removal of the Magazine	5
Magazine Loading	5
Pistol Loading	5
Reloading During Shooting	6
Unloading the Pistol	6
Engaging the Safety Mode	6
Sight Adjustment	7
MAINTENANCE INSTRUCTIONS	7
Stripping for Cleaning - Disassembly	7
Firing Pin Disassembly	8
Magazine Disassembly	8
Cleaning the Pistol	8
Cleaning the Barrel Bore and the Cartridge Chamber	8
Cleaning of Other Pistol Parts	9
Preserving	9
Waste Management	9
LIST OF PARTS	10
TROUBLESHOOTING, CAUSES AND REMEDIES	11
TECHNICAL SPECIFICATIONS	12
LIST OF ILLUSTRATIONS	13

SAFETY INSTRUCTIONS

Always follow the safety instructions for your safety and the safety of others.

1. Always handle your pistol as if it were loaded.
2. Never point your pistol at anything you do not intend to shoot.
3. Never take anyone's word that a gun is unloaded.
4. Always make sure that your pistol is not loaded before laying it down, or handing it to another person.
5. Always keep and carry your pistol empty, with the hammer forward except when you intend to shoot.
6. Never abuse your pistol by using it for any purpose other than shooting.
7. Never leave the pistol cocked and ready to fire unattended.
8. Before loading your pistol be sure that the barrel bore, chamber, and action are clean and clear of obstructions. After shooting, clean the dirtied pistol as soon as possible.
9. Always use only clean, dry, original high quality commercially manufactured ammunition, which is appropriate to the caliber of your pistol.
10. Never drink alcoholic beverages or take drugs before or during shooting.
11. Always wear safety glasses and ear protection when shooting.
12. Always keep the safety on when the pistol is loaded and cocked, until you are ready to fire. Keep your pistol pointed in a safe direction when disengaging the manual safety.
13. Always keep clear and keep others clear of the ejection port.
14. Never squeeze the trigger or put your finger in the trigger guard until you are aiming at a target and ready to shoot.
15. Always be absolutely sure of your target, and the area behind it, before you squeeze the trigger. A bullet could travel through or past your target up to several hundred meters.
16. Never shoot at a hard surface such as rock, or a liquid surface such as water.
17. Never fire your pistol near an animal unless it is trained to accept the noise.
18. Never indulge in "horseplay" while holding your pistol.
19. Failure to fire: In case of failure to fire hold the firearm keeping it pointed towards the target, or a safe open area and wait 30 seconds. If a hangfire (slow ignition) has occurred, the cartridge will fire within 30 seconds. If the cartridge does not fire, eject the cartridge and examine it. If the firing pin indent on the cartridge is light, or non-existent, have the firearm examined by a competent gunsmith.
20. Always make sure your pistol is not loaded before cleaning, storing or travelling.

21. Always keep and store your pistol and ammunition in separate locked receptacles out of reach and sight of children and untrained people.
22. Never alter any parts of your pistol as the safety and proper function of your pistol could be seriously compromised.
23. Always be aware that corrosion, use of damaged ammunition, dropping the pistol on hard surfaces or other "coarse treatment" could cause damage you may not see. If something like this happens allow the pistol to be examined and tested by a competent gunsmith.

PISTOL DESCRIPTION AND TERMINOLOGY

The names of basic pistol parts used in this Instruction Manual are presented in Fig. 1 on the inner side of the left-hand cover. Nomenclatures of all CZ 82 parts are presented in the section *List of Parts*.

The CZ 82 pistol is a semi-automatic handgun with unlocked breech. It is produced in many versions. Characteristic features of all versions are:

- large capacity double-column magazine
- ergonomical shape allowing shooting to be carried out by left or right hand
- comfortable grip and balance
- good results at instinctive shooting (without aiming)
- low trigger pull weight
- selective SA/DA firing mechanism operation
- high accuracy of fire
- long service life
- high reliability, even with various types of cartridges
- the slide stays open after the last cartridge has been fired
- the sights are outfitted with a three-dots illuminating system for better aiming in poor visibility conditions

Comments:

SA (Single Action)

The trigger mechanism operates in a single action mode of fire. The hammer is cocked manually and then after pressing the trigger the pistol is fired. The trigger travel is short, and pull weight is low. After each discharge the hammer remains cocked.

DA (Double Action)

The trigger mechanism operates in a double action mode of fire. The hammer is cocked, released and the pistol fired by one pull of the trigger. The trigger travel is longer, and trigger pull weight is higher than at SA mode of fire.

OPERATING INSTRUCTIONS

Ammunition

Use only factory manufactured ammunition of appropriate caliber, which are in compliance with CIP regulations (International Proof Commission for Firearms) or SAAMI (Sporting Arms and Ammunition Manufacturers' Institute Inc. of the United States). The use of other cartridges could damage the handgun or cause injury to the shooter.

Removal of the Magazine

Hold the pistol in your right/left hand, depress the magazine catch with the thumb and by the other hand remove the magazine.

Magazine Loading

With the open end up, grasp the magazine in one hand. Place a cartridge on the magazine follower. Press the cartridge down and back until it touches the rear flat edge of the magazine. Place the next cartridge on top of the previous cartridge and press down and back (Fig. 2). We recommend that when some cartridges are already loaded in the magazine, depress them slightly with the plastic loading tool provided as accessory.

The number of cartridges can be checked through the inspection holes in the sides of the magazine. Do not try to exceed the magazine capacity - doing so can cause a feeding failure.

Pistol Loading

ALWAYS MAKE SURE THE PISTOL IS POINTED IN A SAFE DIRECTION WHEN LOADING!

Insert a loaded magazine and ensure that it has engaged the magazine catch.

Hold the pistol by the grip with one hand and with the thumb and index finger grasp the serrated finger grips on both sides of the slide. Retract the slide to the stop and allow it to snap forward (Fig. 3). This procedure cocks the hammer and inserts a cartridge into the chamber. The pistol is now ready to fire. If you do not intend to fire immediately ensure the pistol safety by some of the methods mentioned in the section: *Engaging the Safety Mode*.

Reloading During Shooting

When the last cartridge has been fired the slide will stay to the rear. Remove the emptied magazine and replace it with a loaded one. Thumb down the slide stop with the shooting hand (Fig. 4), or draw back the slide with the other hand and allow it to snap forward (Fig. 3). The pistol is again loaded and ready to fire.

Unloading the Pistol

ALWAYS MAKE SURE THE PISTOL IS POINTED IN A SAFE DIRECTION!

- Remove the magazine
- Draw back the slide and verify the last cartridge has been extracted from the chamber and ejected
- Let the slide snap fully forward
- Depress the trigger (dry fire)

Engaging the Safety Mode

Push the safety up to the Safety-On position (Fig. 5) until the red warning dots on both sides of the pistol situated between the safety and the slide are covered. The safety in this position blocks the trigger mechanism and slide, thus preventing the pulling of the trigger and operating the slide. The safety can be engaged only when the hammer is cocked, and for this reason it is applied especially in the case of a short-term interruption of shooting.

Besides the method previously described it is possible to put the pistol into a safety mode and still be ready to fire immediately:

Grasp the grip of loaded pistol, POINT IN A SAFE DIRECTION. With thumb and index finger of the other hand hold the hammer firmly (Fig. 6), pull the trigger and release the hammer slowly and gradually until it rests on the firing pin stop. Release the trigger. Apply extreme caution when lowering the hammer to avoid an accidental discharge! We strongly recommend to practice this operation beforehand with the pistol unloaded.

In this state the pistol is safe for all normal handling and at the same time ready for immediate use. The design of this handgun incorporates the feature that the manual safety can not be applied when the hammer is not cocked to avoid reducing the readiness of the pistol for use by accidental engaging of the manual safety.

Please remember that the safest way to secure a pistol is to unload it and store it in a safe place!

Sight Adjustment

The pistol sights were sighted in at the manufacturing plant at a distance of 25 m so that the mean point of impact approximately conforms to the point of aim.

Windage correction can be carried out by the drifting of the rear sight in the dovetail and then secured in its position by an indentation. Elevation correction is carried out by exchanging the rear sights for higher or lower sizes.

In case of need there is an option to exchange the usual rear sights for an adjustable sight of suitable type, or as the case may be to also exchange the front sight, which is secured by a roll pin. These adjustments should be entrusted to a competent gunsmith.

MAINTENANCE INSTRUCTIONS

Stripping for Cleaning - Disassembly

POINT YOUR PISTOL IN A SAFE DIRECTION!

1. Remove the magazine. The pistol must not be disassembled with the magazine inserted!
2. Put the safety to "OFF" position, in order to release the movement of the slide.
3. MAKE SURE THAT THERE IS NO CARTRIDGE IN THE CHAMBER!
4. Grasp the pistol with one hand. Put the index finger of your other hand through the trigger guard, support your thumb against front, lower part of the slide and pull straight out and down to tilt the trigger guard downward (Fig. 7).
5. Pull the slide fully back, lift the rear end and move the slide forward to separate it from the barrel and frame (Fig. 8).
6. Remove the recoil spring from its position surrounding the barrel.

No further disassembly is needed for routine maintenance. When a great number of cartridges have been fired, it is also advisable to disassemble the firing pin and magazine.

Note to reassemble:

The pistol must not be fired with tilted trigger guard as this condition could cause damage to the pistol. For this reason the trigger guard is designed in such a way that it is not possible to insert a magazine into the frame until the trigger guard is back in place.

Firing Pin Disassembly

Push in the rear end of firing pin using a suitable tool, below the level of the firing pin stop, and shift the firing pin stop approx. 2 mm down (Fig. 9). Then cover the firing pin stop with your thumb to avoid loosing the spring loaded firing pin and with the other hand pull the firing pin stop completely off the slide. Be very careful at this stage of the disassembly procedure, as the firing pin is spring loaded and could fly out, getting lost, or even causing injury.

Magazine Disassembly

To remove the magazine base, push on the base lock which sticks out through a hole in the base and slide the base about 5 mm towards the front of the magazine. Cover the base with your thumb to prevent losing the magazine spring and with the other hand remove the base from its guiding rails. Be careful during the disassembly as the spring could fly out, or even cause an injury.

CAUTION:

No further disassembly of your pistol is recommended. Should your pistol require adjustment or repair be sure the task is entrusted to a competent gunsmith!

Cleaning the Pistol

Clean the pistol

- Each time you use it
- If you get your pistol wet
- As soon as possible after shooting
- At least once a year in a temperate climate
- As often as once a month in a tropical climate, or other demanding environment

Cleaning the Barrel Bore and the Cartridge Chamber

If the pistol has not been fired or if only a few cartridges have been fired, clean the barrel bore and cartridge chamber with a clean patch attached to the cleaning rod. Repeat the cleaning, changing patches, until the last patch comes out clean.

When the barrel bore is very dirty, apply a gun cleaning solution using a cleaning brush. Let the solvent act for about 10 minutes (this time may vary depending on the solvent agent being used). Then thoroughly scrub out the barrel bore. Subsequently, dry the barrel bore and cartridge chamber with a clean patch and check that all powder residues or fouling have been removed. If necessary repeat this procedure.

The cleaning rod and the brush must be inserted into the barrel bore from the chamber, to prevent wear or damage to the muzzle. Pass the brush all the way through the barrel bore before reversing the movement. If you try to change directions with the brush in the barrel, the brush could stick.

Cleaning of Other Pistol Parts

Other parts of the pistol (including the external surfaces of the barrel) should be cleaned with a dry cloth, old toothbrush, brass bristle brush or a wooden scraper. Preserving oil or paraffin oil can be used for proper cleaning. Never use an agent designed for barrel bore cleaning. These solutions could remain in the joints, and after some time could cause corrosion.

Check that cloth particles or brush bristles have not become lodged in any part of the pistol.

Preserving

When the barrel bore, cartridge chamber, and all accessible parts are clean and dry, wipe these parts with a cloth soaked in gun oil or apply the oil in a spray. Remove all excess oil.

Before shooting always wipe the barrel bore dry. At very low temperatures remove the oil from all accessible parts or apply a lubricant prepared especially for these conditions.

Use thick preserving agents such as preserving grease only for a long-term storage in demanding climate environments, and before any use of the pistol it must be thoroughly removed from all parts of the firearm.

Waste Management

When used properly, the materials used in the product and packaging have no adverse effects on human health or the environment. When disposing of the product or its packaging, metal parts (steel and non-ferrous metals), plastics, wood, paper and cardboard should be stored separately in collecting containers intended specifically for that purpose.

LIST OF PARTS

1 Slide
2 Front Sight
3 Front Sight Pin
4 Rear Sight
5 Extractor
6 Pin (3x)
7 Extractor Spring
8 Firing Pin
9 Firing Pin Spring
10 Firing Pin Stop
11 Frame
12 Barrel
13 Recoil Spring
14 Trigger
15 Trigger Spring
16 Pin (2x)
17 Trigger Bar
18 Trigger Bar Pin
19 Disconnector
20 Ejector
21 Automatic Safety
22 Steel Ball
23 Pin (2x)
24 Trigger Bar Disconnector
25 Trigger Bar Disconnector Rivet
26 Hammer
27 Hammer Pin
28 Hammer Lever
29 Sear
30 Sear Spring
31 Main Spring Strut
32 Main Spring
33 Main Spring Plug
34 Safety
35 Safety Latch
36 Safety Latch Spring
37 Safety Pin
38 Trigger Guard
39 Pin
40 Trigger Guard Pin
41 Slide Stop
42 Slide Stop Spring
43 Magazine Catch Push Button
44 Magazine Catch
45 Magazine Catch Spring
46 Magazine Catch Lever
47 Magazine Catch Lever Pin
48 Left Grip Panel
49 Right Grip Panel
50 Grip Panel Screw (2x)
51 Grip Panel Insert (2x)
52 Magazine Body
53 Magazine Base
54 Magazine Base Lock
55 Magazine Spring
56 Magazine Follower

TROUBLESHOOTING, CAUSES AND REMEDIES

If your pistol is properly used and maintained, malfunctions will rarely occur. However, if such a situation does occur, please observe the following instructions.

CAUTION - If a malfunction occurs, the possibility of unintentional discharge is substantially increased. For this reason, carefully observe previously mentioned *Safety Instructions*. Keep the pistol pointed in a safe direction, do not turn the pistol against your body or anyone else's! Do not place your hands in front of the barrel!

If you use your pistol for self-defense, or in law enforcement, please acquire so-called "dummy cartridges" and practice fast clearing of malfunctions as described below.

Malfunction	Possible Cause	Remedy
A cartridge has not been fed into the chamber or the slide has not fully locked with the barrel.	Magazine is not fully inserted or is damaged.	Insert magazine properly or change magazine.
	The pistol or cartridges are fouled (dirty) or too heavily greased.	Clean the pistol and cartridges and wipe them dry or as case may be slightly lubricate.
Misfire	Defective cartridge.	Pull the trigger again. If a discharge is not initiated, follow the Safety Instructions according to point 19.
	Firing pin hole fouled (dirty) or improper lubrication agent used under low temperature conditions.	Disassemble and clean the firing pin or use a low temperature lubricant.
A shot sounds "weak" combined with failure to eject the cartridge case.	The primer has been activated but no powder load was inside the cartridge case.	Unload the pistol and check that the bullet is not lodged in the barrel. A subsequent shot could cause damage to the barrel.
The spent case has not been ejected.	Cartridge chamber, extractor or ammunition dirty, or unsuitable lubricant in low temperature environment.	Clean and wipe the pistol dry or lubricate lightly with a suitable agent. Use new and clean ammunition.

If you cannot clear away any malfunction in the manner described above, entrust the pistol to a competent gunsmith for inspection and repair.

TECHNICAL SPECIFICATIONS

Caliber	7,65 mm Browning (.320 ACP)	9 mm Browning Court (.380 ACP)	9 mm Makarov	9 mm P.A. Rubber
Overall length [mm]	172	172	172	172
Height [mm]	127	127	127	127
Width [mm]	36	36	36	36
Weight with empty magazine [g]	750	800	800	750
Barrel length (without glide ramp) [mm]	97	97	97	97
Sight radius [mm]	127	127	127	127
Magazine capacity [cartridges]	15 *	12 *	12 *	12 *
Barrel Bore	Grooved	Grooved	Polygonal	Smooth
Rifling Pitch (R.H.) [mm]	250	250	240	-
Trigger pull (SA) [N]	15 - 24,5	15 - 24,5	15 - 24,5	15 - 24,5
Trigger pull (DA) [N]	max. 58,9	max. 58,9	max. 58,9	max. 58,9

* To some countries the CZ 82 pistols are supplied with reduced magazine capacity in compliance with the local laws.

LIST OF ILLUSTRATIONS

1. The names of basic parts
2. Magazine loading
3. Pistol loading
4. Slide release from its "rear lock-up" position by depressing slide stop
5. Shifting the safety to the "SAFETY-ON" position
6. Release of the hammer to its forward position
7. Trigger guard tilting
8. Slide removal
9. Firing pin disassembly

The Company, reserves the right to make any changes it thinks necessary to improve its models or to meet any requirements of manufacturing or commercial nature.

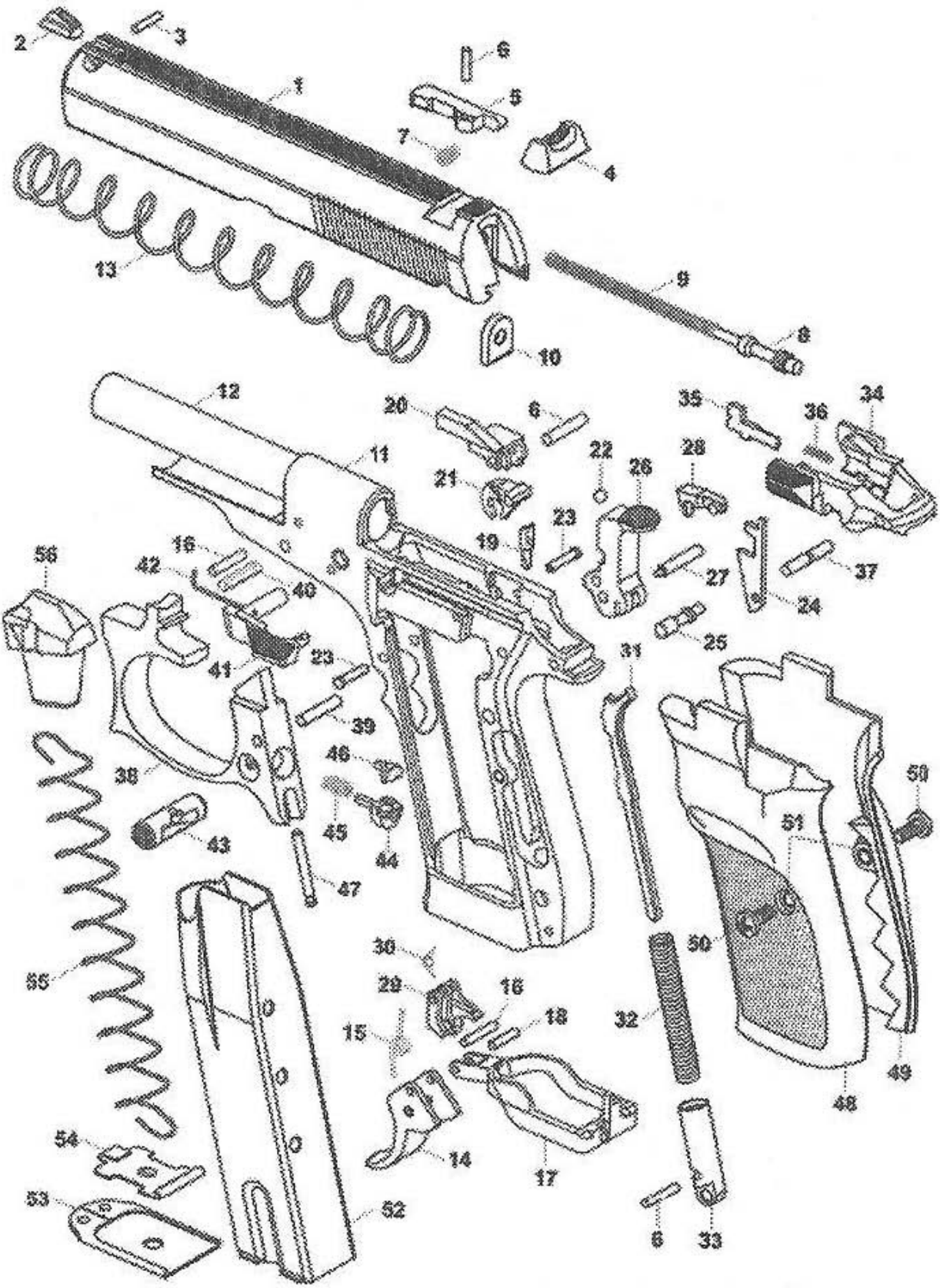
2
3
1
6
5
7
4
13
9
8
10
12
20
6
35
36
34
11
22
26
28
21
23
19
27
37
24
56
16
42
40
25
41
23
31
39
46
38
50
45
51
43
44
47
50
30
55
29
16
18
32
15
49
48
54
14
17
53
52
6
33

CZ 82

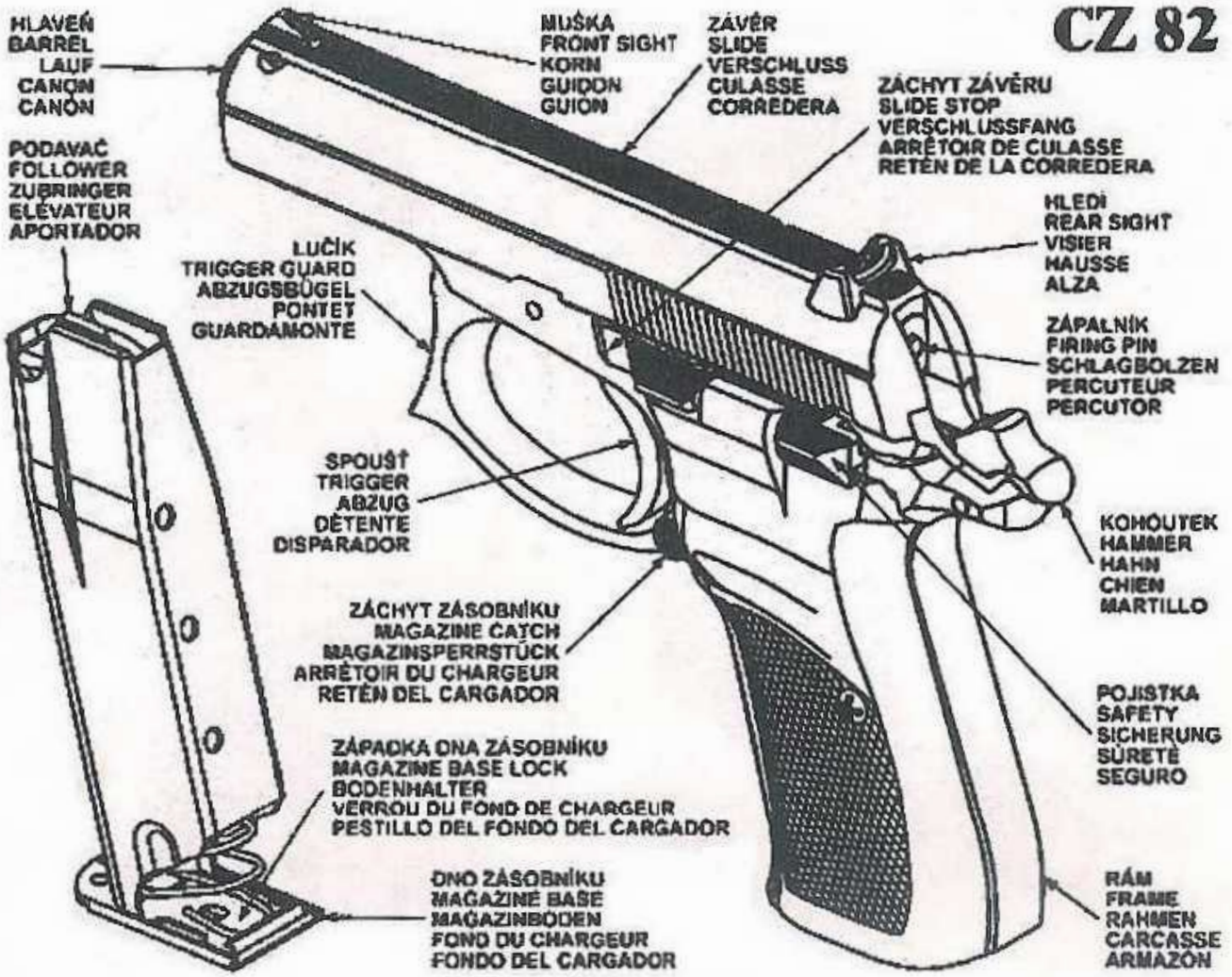
HLAVEŇ
BARREL
LAUF
CANON
CAÑON
MUŠKA
FRONT SIGHT
KORN
GUIDON
GUIÓN
ZÁVĚR
SLIDE
VERSCHLUSS
CULASSE
CORREDERA
ZÁCHYT ZÁVĚRU
SLIDE STOP
VERSCHLUSSFANG
ARRÊTOIR DE CULASSE
RETÉN DE LA CORREDERA
PODAVAČ
FOLLOWER
ZUBRINGER
ELÉVATEUR
APORTADOR
HLEDÍ
REAR SIGHT
VISIER
HAUSSE
ALZA
LUČÍK
TRIGGER GUARD
ABZUGSBÜGEL
PONTET
GUARDAMONTE
ZÁPALNÍK
FIRING PIN
SCHLAGBOLZEN
PERCUTEUR
PERCUTOR
SPOUŠŤ
TRIGGER
ABZUG
DÉTENTE
DISPARADOR
KOHOUTEK
HAMMER
HAHN
CHIEN
MARTILLO
ZÁCHYT ZÁSOBNÍKU
MAGAZINE CATCH
MAGAZINSPERRSTÜCK
ARRÊTOIR DU CHARGEUR
RETÉN DEL CARGADOR
POJISTKA
SAFETY
SICHERUNG
SÛRETÉ
SEGURO
ZÁPADKA DNA ZÁSOBNÍKU
MAGAZINE BASE LOCK
BODENHALTER
VERROU DU FOND DE CHARGEUR
PESTILLO DEL FONDO DEL CARGADOR
DNO ZÁSOBNÍKU
MAGAZINE BASE
MAGAZINBODEN
FOND DU CHARGEUR
FONDO DEL CARGADOR
RÁM
FRAME
RAHMEN
CARCASSE
ARMAZÓN

①

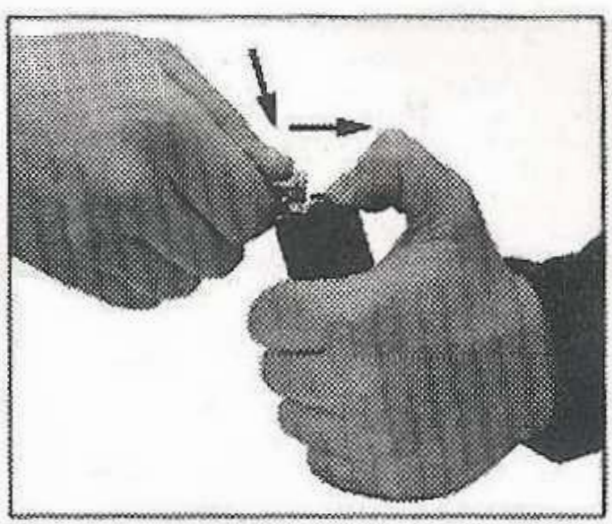

②

③

④

⑤

⑥

⑦

⑧

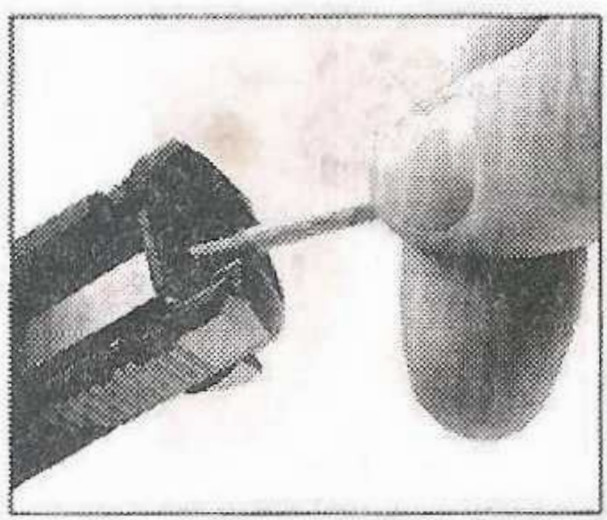

⑨